Turikan BP-02 eyelet punch

Operating instructions and safety information

Manual device for punching and binding thick documents with eyelets. The device punches up to 100 sheets of paper (max. 10 mm) with a hole spacing of 80 mm, then sets aluminium eyelets in three lengths. The distance from the holes to the paper edge is adjustable from 8 mm to 14 mm. Item number 10371.

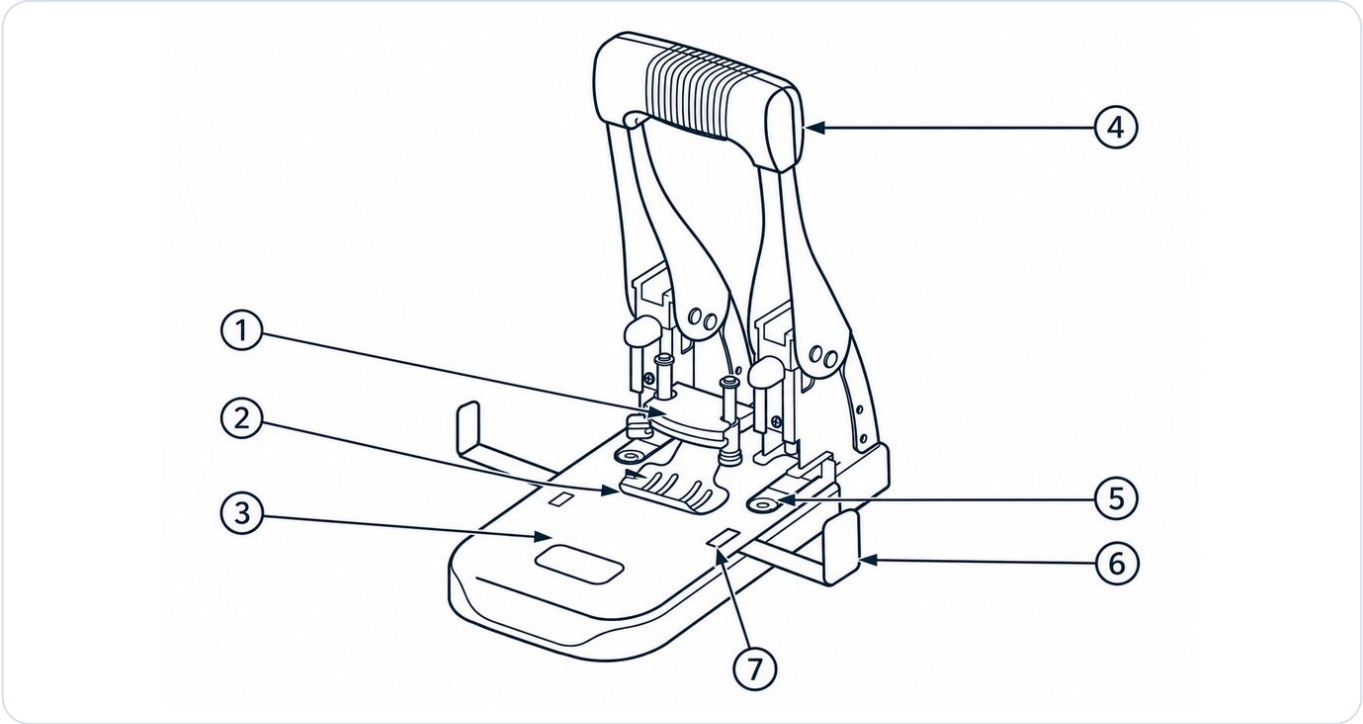

Fig. 1 · Components

No.	Component
(1)	Upper eyelet setting unit (PUNCHING / BINDING lever)
(2)	Paper holder
(3)	Sliding plate
(4)	Handle
(5)	Lower eyelet setting unit
(6)	Paper guide with “E” / “S” scale
(7)	Paper size window

Key - notices and symbols

⚠	**CAUTION**	Potential risk of injury.
!	**NOTICE**	Potential damage to property.
i	**NOTE / TIP**	Useful operating information.

Read these instructions before first use. Keep them and pass them on with the device if it changes hands.

1 Technical data

Feature	Specification
Description	Turikan BP-02 eyelet punch – device for punching and binding paper with eyelets
Item number	10371
Punching capacity	max. 10 mm, 100 sheets of paper
Hole spacing	80 mm ±0.5 mm
Hole distance from paper edge	adjustable from 8 mm to 14 mm
Hole diameter	6 mm ±0.5 mm
Dimensions	229 mm × 138 mm × 112 mm (with handle locked)
Weight	approx. 1.95 kg
Colour	silver
Suitable material	paper only
Brand	Turikan
Manufacturer and importer	ITERNET European Distribution s.r.l., Piacenza (Italy)
Distributor	oesen-de.de | We have the solution!

NOTE - Paper size

To punch the short side of a document, use scale “E” on the paper guide (6). To punch the long side, use scale “S”. The selected size is shown in the window (7).

2 Suitable eyelets and spare parts

Suitable eyelets

Eyelet type	Sheets	Height	Pack	Item no.
Turikan BPG-6,5	5–50 sheets	6.5 mm	80 pieces	10366
Turikan BPG-9,0	51–75 sheets	9 mm	50 pieces	10367
Turikan BPG-11,5	76–100 sheets	11.5 mm	40 pieces	10368

All eyelets are made of anodised aluminium, internal Ø 5 mm / external Ø 6 mm. Available from oesen-de.de.

Spare parts

Spare part	Item no.
Hollow punches for Turikan BP-02, 1 set = 2 pieces	10399
Plastic discs (support discs) for Turikan BP-02	10378

NOTE - Choosing the correct eyelet length

The eyelet length depends on the thickness of the document. Select the eyelet according to the number of sheets in the table.

3 Safety information

CAUTION - very sharp hollow punches

The hollow punches are very sharp. Keep your hands out of the punching area and use the device only for its intended purpose.

CAUTION - risk of crushing

Keep fingers and hands away from the area between the handle and the device and from the punching area when pressing down the handle (4).

NOTICE - maximum punching capacity

Punch no more than 100 sheets of paper (max. 10 mm) at a time. Do not exceed this limit.

NOTICE - process paper only

Do not punch other materials such as leather, fabric, vinyl or metal. These can damage the hollow punches.

NOTICE - remove staples and paper clips

Remove staples and paper clips before punching. Punching through them will damage the hollow punches.

NOTICE - locked handle

Do not force the handle (4) down while it is locked. This could bend the locking mechanism.

3 Safety information (continued)

NOTE - punching waste

Too much punching waste can impair the operation of the device. Empty the waste drawer regularly (Chapter 5).

NOTE - location for use and storage

Do not use or store the device in direct sunlight, on an unstable surface, at very high or very low temperatures, near fire or water, or in dusty surroundings.

Children and unauthorised persons: Keep the device away from children; it is not a toy. Eyelets are small parts - keep the device and eyelets out of reach of children and unauthorised persons.

Passing on the device: Keep this safety information and pass it on together with the device.

4 Operation – preparation and punching

1 **Unlock the handle.**

Press the handle (4) down to release the lock. Check that the lever on the upper eyelet setting unit (1) is on the left in the PUNCHING position.

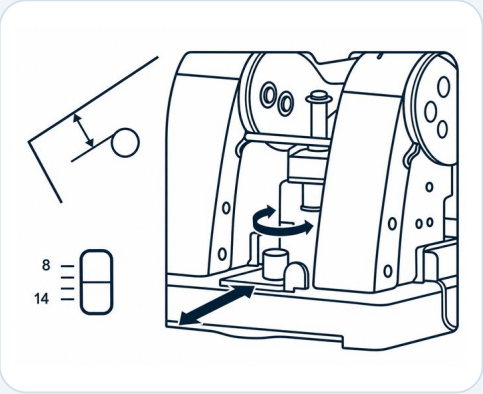

F1

2 **Set the edge distance.**

Use the rotary knob to set the distance from the holes to the paper edge. It can be adjusted from 8 mm to 14 mm; the scale shows the selected setting.

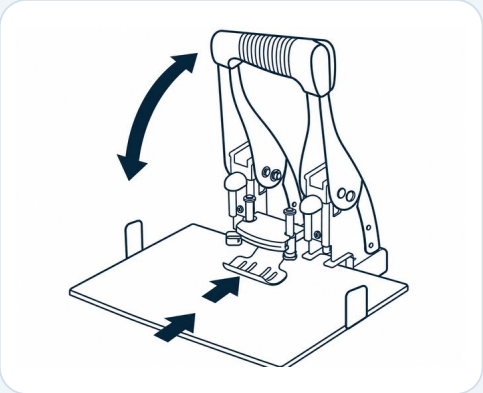

F2

3 **Insert the paper and punch.**

Select the paper size: short side – scale “E”, long side – scale “S” on the paper guide (6); the setting is shown in the window (7). Slide the sliding plate (3) forwards as far as it will go and place the paper under the paper holder (2). Press the handle (4) down to punch.

4 Operation – inserting eyelets and binding

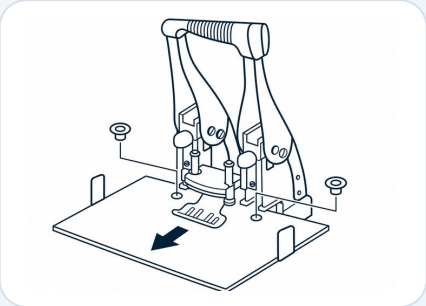

F3

4 **Insert the eyelets.**

Pull the paper holder (2) towards you until the sliding plate (3) reaches its stop. Insert the eyelets into the holes. Choose the eyelet length to suit the number of sheets (Chapter 2).

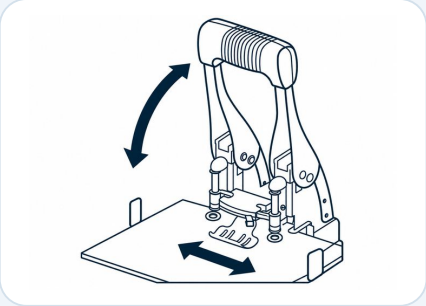

F4

5 **Bind the paper.**

Move the lever on the upper eyelet setting unit (1) to the right to BINDING and press the handle (4) all the way down. Then move the lever back to the left to PUNCHING and remove the documents.

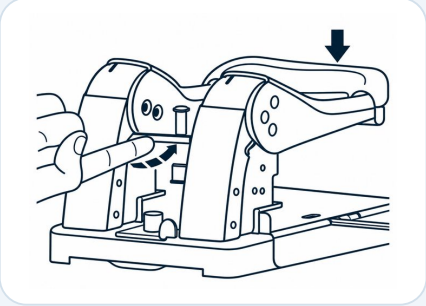

F5

6 **Lock the handle after use.**

Press the handle (4) down and push in the locking pin.

NOTE - Reset the lever

After binding, always move the lever on the upper eyelet setting unit (1) back to PUNCHING before punching again.

5 Care and maintenance

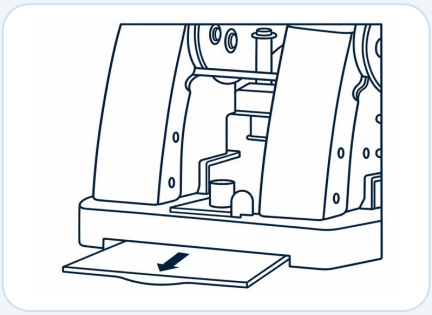

F6

Empty the punching waste

Pull out the waste drawer at the bottom rear of the device and empty it. Remove punching waste regularly.

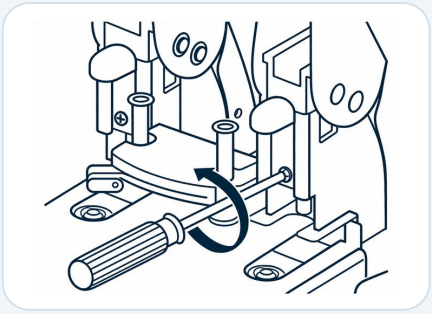

F7

Replace the hollow punches

Loosen the screw until the hollow punch drops out. Insert the new hollow punch upwards as far as possible and retighten the screw.

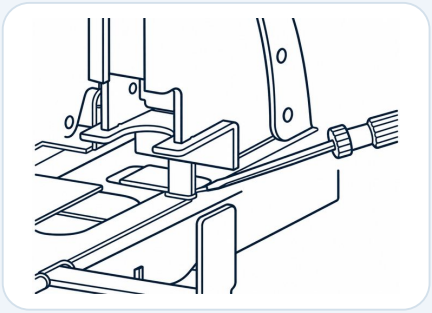

F8

Replace the plastic disc

Pull the paper holder (2) towards you and use a screwdriver to remove the plastic disc as shown in the illustration.

CAUTION - Cutting edges of the hollow punches

When replacing hollow punches and the plastic disc, take care around the sharp cutting edges of the hollow punches.

Spare parts: hollow punches, item no. 10399; plastic discs, item no. 10378 – available from oesen-de.de.

6–8 Disposal, service and information

6 Disposal

Dispose of the device at a recycling centre or through municipal collection; observe local acceptance conditions. Sort the packaging by material and dispose of it through paper or packaging collection.

7 Manufacturer and distributor (GPSR)

Manufacturer and importer: ITERNET European Distribution s.r.l.
Via Stefano Merli, 64/66 · 29122 Piacenza (PC) · Italy
Tel. +39 0523 571065 · Email: info@iternet-europe.com · Web: www.iternet-europe.com
Brand: Turikan · Item no. 10371 · Manufacturer part number 2010
Distributor in Germany: oesen-de.de | We have the solution!, Habichtstrasse 22, 81827 München

8 Warranty and liability information

Warranty information: www.oesen-de.de/agb. All information is provided without guarantee. Subject to technical changes, errors and misprints. Illustrations may differ from the items supplied. To the extent permitted by law, oesen-de.de accepts no liability for damage caused by improper use, unauthorised modifications or failure to follow these instructions. Mandatory statutory liability remains unaffected.

DISTRIBUTOR · oesen-de.de | We have the solution!

Habichtstrasse 22, 81827 München
Tel. +49 8121 999 9 771 · Fax +49 89 999 50 921
info@oesen-de.de · www.oesen-de.de

Edited and designed by oesen-de.de based on the manufacturer’s original instructions.
Revision: November 2026.