Turikan BP-01 eyelet punch

Operating instructions and safety information

Manual device for punching and binding paper with eyelets. The device punches up to 30 sheets of paper (max. 3 mm) with a hole spacing of 80 mm, then sets the eyelets. Four-hole punching in A4 format is also possible in two punching operations. Item number 10370.

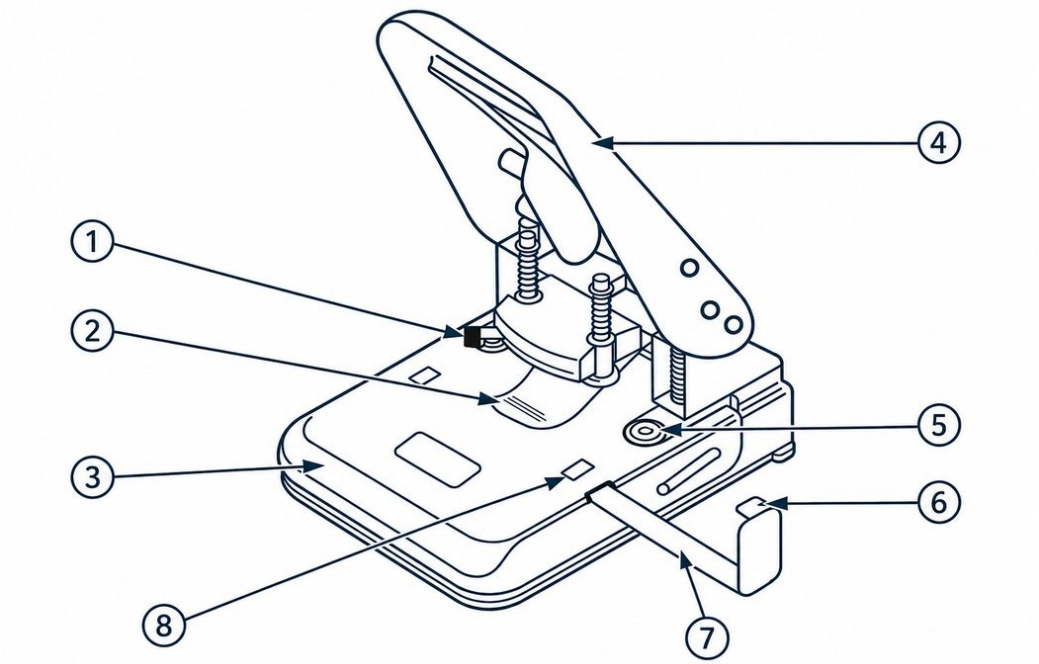

Fig. 1 · Components

No.	Component
(1)	Eyelet setting mechanism (PUNCHING / BINDING lever)
(2)	Paper holder
(3)	Sliding plate for inserting paper
(4)	Handle
(5)	Eyelet pins
(6)	Locking device
(7)	Paper guide
(8)	Paper size indicator

Key - notices and symbols

CAUTION	Potential risk of injury.
NOTICE	Potential damage to property.
NOTE / TIP	Useful operating information.

Read these instructions before first use. Keep them and pass them on with the device if it changes hands.

1 Technical data

Feature	Specification
Description	Turikan BP-01 eyelet punch - device for punching and binding paper with eyelets
Item number	10370
Punching capacity	max. 3 mm, 30 sheets of paper
Hole spacing	80 mm ±0.5 mm
Distance from paper edge	10 mm
Hole diameter	6 mm ±0.5 mm
Dimensions	124 mm × 165 mm × 77 mm (with handle locked)
Weight	approx. 1 kg
Colour	blue
Suitable material	paper only
operating environment	office, normal room temperature
Suitable eyelets	Turikan BPG-01, anodised aluminium, inner Ø 5 mm / outer Ø 6 mm, 100 pieces - item no. 10369
Brand	Turikan
Manufacturer	ITERNET European Distribution s.r.l., Piacenza (Italy)
Distributor	oesen-de.de | We have the solution!

NOTE - Paper size indicator (8)

Line ‘E’: The short edge of the paper is punched.
Line ‘S’: The long edge of the paper is punched.
Position ‘D’: Four-hole punching in A4 format (see chapter 4).

2 Safety information

CAUTION - very sharp punches

The punches are very sharp. Keep your hands out of the punching area and use the device only as intended to prevent injury.

CAUTION - crushing hazard

When pressing down the handle (4), keep fingers and hands away from the space between the handle and the device, and from the punching area.

NOTICE - maximum punching capacity

Punch no more than 30 sheets of paper (max. 3 mm) at a time. Do not exceed this limit.

NOTICE - paper only

Use the device only for paper. Other materials may damage the punches.

NOTICE - remove staples and paper clips

Remove staples and paper clips before punching. Punching through clips or staples damages the punches.

NOTICE - jamming

If the device jams, do not force the handle (4). Doing so may damage the device.

NOTE - operating environment

The device is intended only for use in offices at normal room temperatures.

Children and unauthorised persons: Keep the device away from children; it is not a toy. Eyelets are small parts - keep the device and eyelets out of reach of children and unauthorised persons.

Passing on the device: Keep this safety information and pass it on together with the device.

3 Operation - preparation and punching

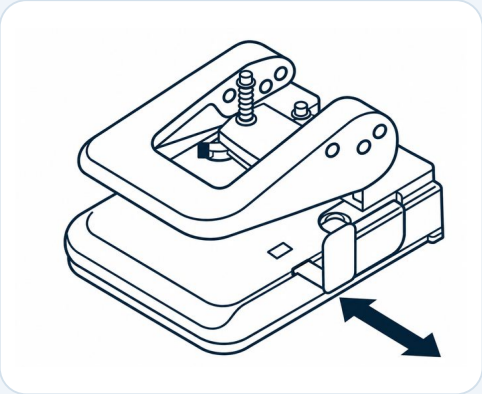

F1

1 **Release the handle and set the paper size.**

Pull the paper guide (7), together with the locking device (6), outwards. This releases the handle (4). Then select the paper size on the indicator (8) by adjusting the paper guide (7): line ‘E’ - punch the short edge of the paper. Line ‘S’ - punch the long edge of the paper.

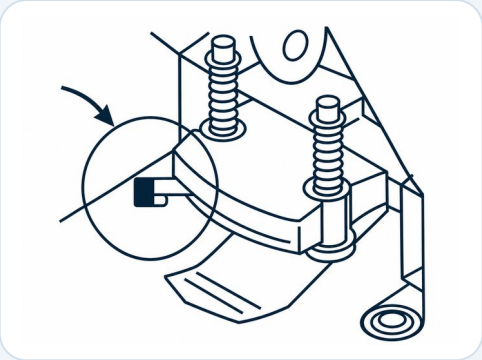

F2

2 **Set the lever to PUNCHING.**

Check that the lever of the eyelet setting mechanism (1) is in the PUNCHING position on the left. This prevents damage to the paper during punching and binding.

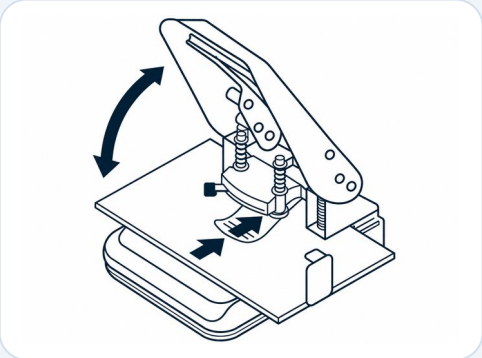

F3

3 **Insert and punch the paper.**

Place the paper on the sliding plate (3), under the paper holder (2). Push the sliding plate (3) in as far as it will go. Press the handle (4) down to punch.

3 Operation - inserting eyelets and binding

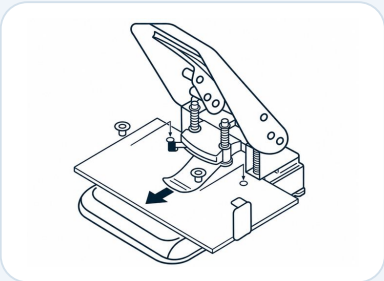

F4

4 **Insert the eyelets.**

Pull the paper holder (2) outwards until the holes are above the eyelet pins (5). Insert the eyelets into the holes.

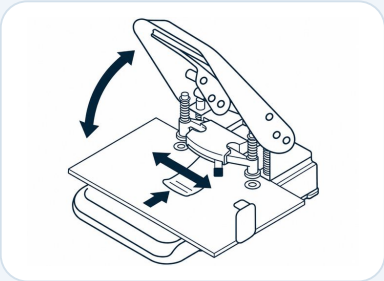

F5

5 **Bind the paper.**

Move the lever of the eyelet setting mechanism (1) to the right, to BINDING, and press the handle (4) down. Then move the lever back to the left, to PUNCHING, and pull the paper out.

6 **Lock the handle after use.**

When the device is not in use, press the handle (4) down and secure it using the locking device (6) on the paper guide (7).

i **NOTE - Reset the lever**

After binding, always return the lever of the eyelet setting mechanism (1) to PUNCHING before punching again.

4 Four-hole punching in A4 format

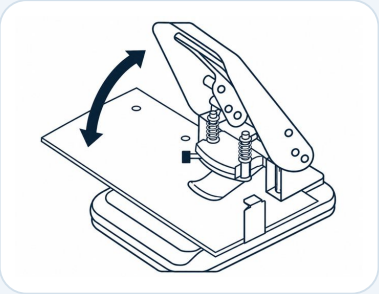

F6

Four holes spaced at 8 × 8 × 8 cm

1. Set the indicator (8) to position ‘D’ by adjusting the paper guide (7). Press the handle (4) down to punch.

2. Pull the paper guide (7) out and insert it on the other side of the sliding plate (3). Select position ‘D’ again and press the handle (4) down to punch.

5-8 Care, service and information

5 Care and storage

Clean the device regularly to prevent dust and paper scraps from causing malfunctions. Use a dry cloth. Store the device in a dry place with the handle locked (step 6), out of reach of unauthorised persons.

6 Disposal

Dispose of the device at a recycling centre or through municipal collection; observe local acceptance conditions. Sort the packaging by material and dispose of it through paper or packaging collection.

7 Manufacturer and distributor (GPSR)

Manufacturer: ITERNET European Distribution s.r.l.
Via Stefano Merli, 64/66 · 29122 Piacenza (PC) · Italy
Tel. +39 0523 571065 · Email: info@iternet-europe.com · Web: www.iternet-europe.com
Brand: Turikan · Item no. 10370 · Manufacturer part number 2000
Distributor in Germany: oesen-de.de | We have the solution!, Habichtstrasse 22, 81827 München

8 Warranty and liability information

Warranty information: www.oesen-de.de/agb. All information is provided without guarantee. Subject to technical changes, errors and misprints. Illustrations may differ from the items supplied. To the extent permitted by law, oesen-de.de accepts no liability for damage caused by improper use, unauthorised modifications or failure to follow these instructions. Mandatory statutory liability remains unaffected.

DISTRIBUTOR · oesen-de.de | We have the solution!

Habichtstrasse 22, 81827 München
Tel. +49 8121 999 9 771 · Fax +49 89 999 50 921
info@oesen-de.de · www.oesen-de.de

Created, edited and designed by oesen-de.de.
Revision: November 2026.