HP-3M press for Double eyelets

Operating instructions and safety information

C-frame hand-lever press for setting Double eyelets (eyelet with washer), with interchangeable upper and lower tools. Item number 10038.

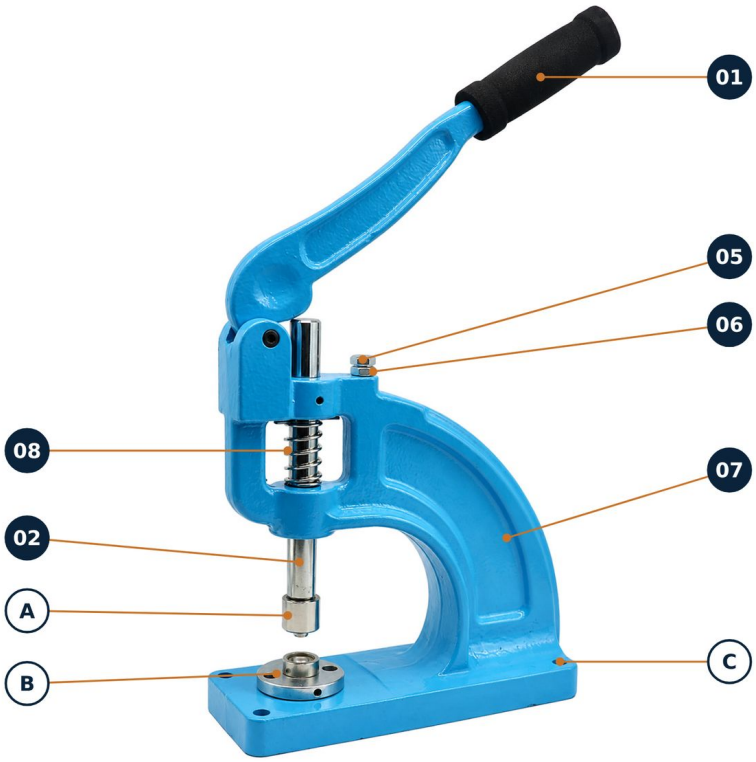

1 Product overview

01 Lever with foam grip
02 Shaft (ram)
05 Stroke adjustment screw
06 Nut (locks screw 05)
07 Frame
08 Return spring
A Upper tool (punch)
B Lower tool (die)
C Base plate mounting holes (4 ×)

Numbers = position numbers in the spare parts list (section 6). Letters = tools and equipment features. Illustration shows the tool fitted.

Key - information and symbols

CAUTION	Possible risk of injury.
NOTICE	Possible damage to property.
NOTE / TIP	Helpful information on use.

Read these instructions before first use. Keep them and pass them on with the eyelet press.

2 Technical data

Feature	Specification
Description	HP-3M press for Double eyelets (eyelet with washer)
Item number / manufacturer number	10038 / HP-3M
Design	C-frame hand-lever press; ram with return spring; stroke adjustment screw with nut
Frame material	High-strength cast iron, painted
Dimensions: length A × width B × height H (see dimensional drawing)	Approx. 249 × 94 × 269 mm (without lever)
Throat depth (tool centre to frame)	Approx. 105 mm
Clearance height (dimension Z)	Approx. 99 mm
Weight	Approx. 8.5 kg
Material thickness	Depends on the barrel length of the eyelet used; up to 5 mm possible
Suitable materials	Textiles, leather, tarpaulins, paper and cardboard
Tool for Double eyelets	DDIE0615; internal diameter 6, 8, 10, 12 and 15 mm; available from oesen-de.de
Matching Double eyelets with washer	DEN0615 (nickel-plated) and DEM0615 (brass-plated); self-piercing; Ø 6-15 mm
Accessories for Single eyelets	SDIE0612, Ø 6-12 mm (separate accessory)
Supplied items	1× universal manual eyelet punching press incl. 1× adapter of your choice 4× M6 screws and nuts for mounting 1× hex key
Manufacturer / Importer	oesen-de.de | We have the solution!
Country of origin	China

Dimensions, throat depth and clearance height are based on the manufacturer’s dimensional drawing, converted and rounded. Clearance height and workable material thickness are different specifications.

2 Dimensional drawing

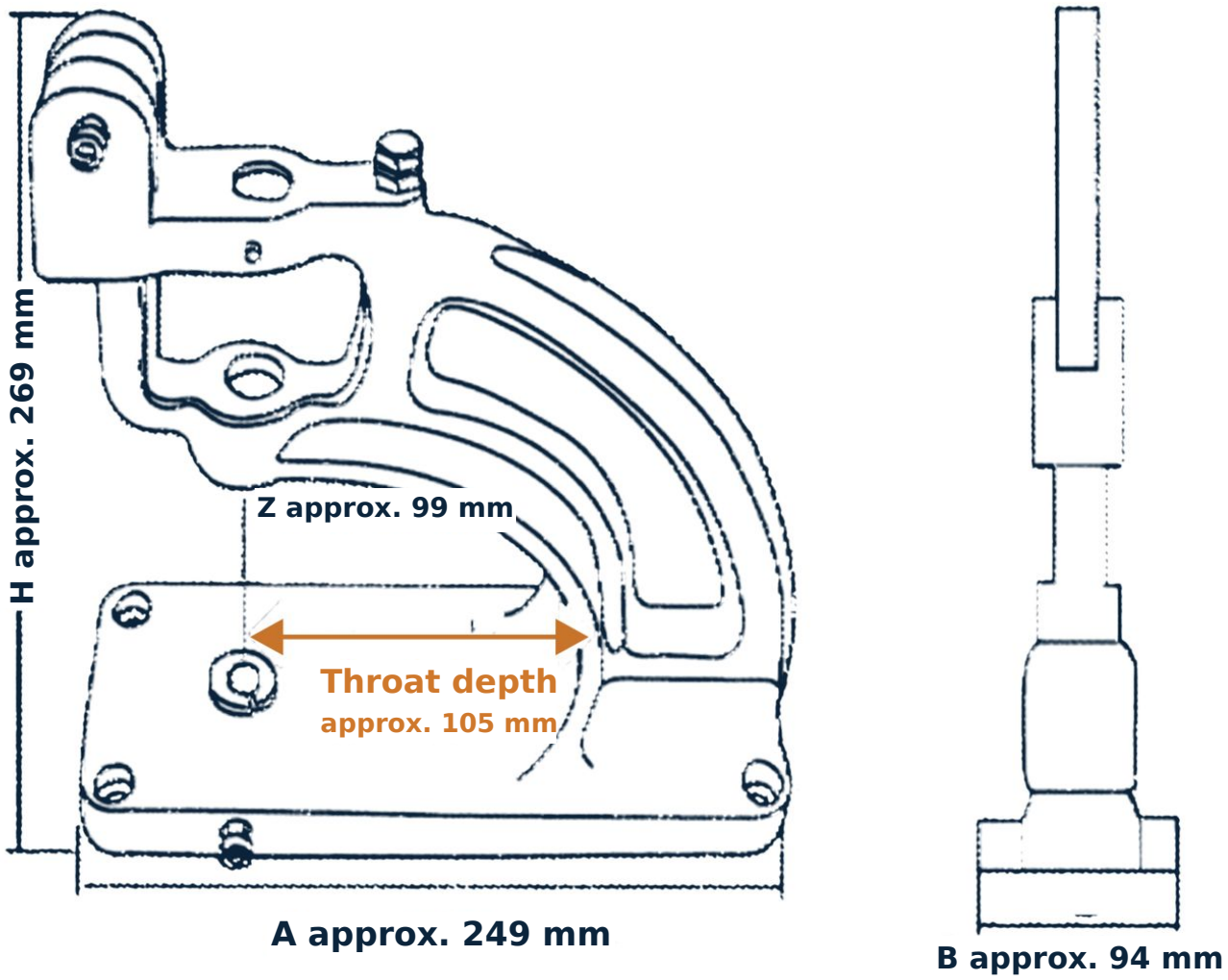

Dim.	Meaning	Value
A	Base plate length	Approx. 249 mm
B	Base plate width	Approx. 94 mm
H	Height (without lever)	Approx. 269 mm
Z	Clearance height	Approx. 99 mm
-	Throat depth (tool centre to frame)	Approx. 105 mm

Dimensions, throat depth and clearance height are based on the manufacturer’s dimensional drawing, converted and rounded. Clearance height and workable material thickness are different specifications.

3 Safety information

CAUTION - Risk of crushing

Never put fingers, hands or hair between the upper and lower tools or in the ram area. Hold the material only at its edge. Do not operate the lever while changing tools, fitting eyelets or cleaning the press.

CAUTION - Keep control of the lever

The ram is returned by a spring. After pressing, guide the lever back in a controlled manner and do not let go while it is under tension. Keep other people away from the lever’s sweep area.

CAUTION - Stable mounting

Use the eyelet press on a sturdy, level workbench and secure it through the four holes in the base plate using the supplied M6 screws and nuts. The press weighs approx. 8.5 kg - carry it with both hands and watch your feet when putting it down.

NOTICE - Match the tool and eyelet

Use only upper and lower tools that match each other and the eyelet size. An incorrect combination damages the tool, eyelet and material. The same nominal diameter alone does not guarantee that the tool and eyelet are compatible - ask oesen-de.de beforehand if in doubt.

NOTICE - Damaged presses

Do not use the press if it is damaged or parts are loose. Do not make unauthorised modifications or extend the lever. If the press jams, do not continue using extra force; contact oesen-de.de.

Children and unauthorised persons: The press must not be used by children and is not a toy. Store it out of reach of unauthorised persons.
Passing on the press: Keep this safety information and pass it on with the press.

4 Operation - preparation

Before starting - arrangement for setting eyelets

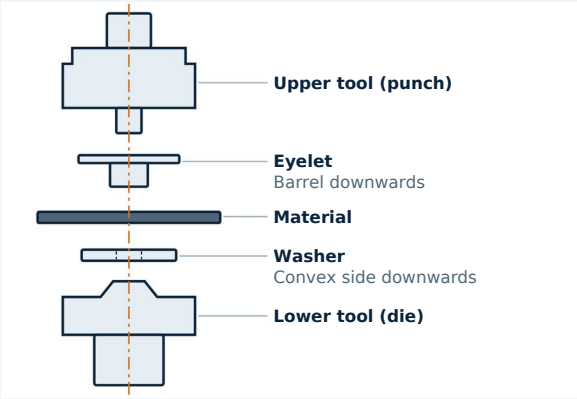

During pressing, the components are arranged from top to bottom as follows: upper tool with the eyelet fitted, the material, and the washer on the lower tool. Eyelet, washer and tool must be the same size. When the lever is pressed down, the eyelet barrel passes through the material and is crimped onto the washer on the reverse side.

01

Position and secure the press

Place the eyelet press on a sturdy, level workbench. Secure the press through the holes in the base plate using the four supplied M6 screws and nuts. Check it for visible damage before use.



F1 · Secure through the mounting holes

02

Fit the upper and lower tools

The upper tool holder is interchangeable and threaded. Fit the upper tool (punch) into the ram and the lower tool (die) into the holder on the base plate. Both tools must match each other and the eyelet size. Change tools only when the lever is at rest.



F2 · Tool fitted

4 Operation - fitting an eyelet

03

Pre-punch the hole

For a clean result, it is advisable to punch the material beforehand with a suitable hole punch. The eyelet can then be set neatly.

04

Fit the eyelet

Fit the eyelet onto the pin of the upper tool with the barrel pointing downwards. The eyelet must sit straight and securely.

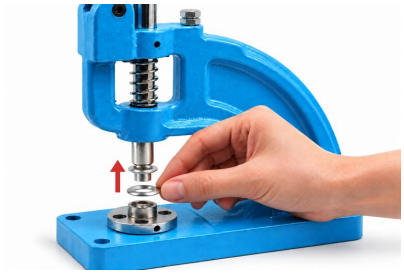

F3 · Fit the eyelet onto the pin from below

05

Place the washer

Place the matching washer centrally on the lower tool, with the convex side facing downwards.



F3 · Place the washer down onto the lower tool

06

Insert the material

Place the material flat between the eyelet and the washer. The pre-punched hole or intended eyelet position must be exactly above the lower tool. Hold the material only at its edge.

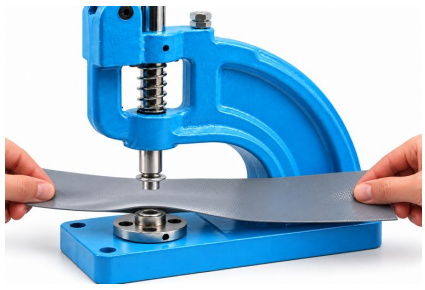

F4 · Insert the material flat

4 Operation - pressing and checking

07

Press the lever down

Press the lever down evenly. This crimps the eyelet onto the washer. Then guide the lever back in a controlled manner.



F5 · Press the lever evenly

08

Check the result

Remove the material. Check that the eyelet is firmly seated, the washer lies flat and the material has no tears. Do not use faulty connections.

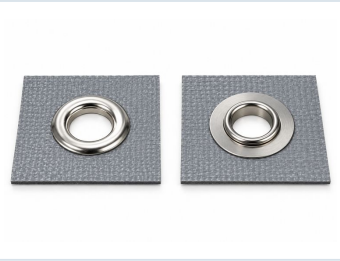

F6 · Front and reverse

TIP - Make a test setting first

First check the tool, eyelet and adjustment on a scrap piece of the intended material.

NOTE - Material thickness

The workable material thickness depends on the barrel length of the eyelet used; thicknesses up to 5 mm are possible.

NOTE - Stroke adjustment

According to the manufacturer’s documentation, screw 05 at the top of the press adjusts the stroke; it is locked by nut 06. To adjust, loosen the nut, turn the screw in small increments, retighten the nut and check the result on a scrap piece. Adjust only when the lever is at rest.

NOTE - Throat depth

The throat depth of approx. 105 mm (tool centre to frame) limits how far from the material edge an eyelet can be set.

5 Eyelet and washer overview

Double eyelets with matching washers in brass and nickel versions.

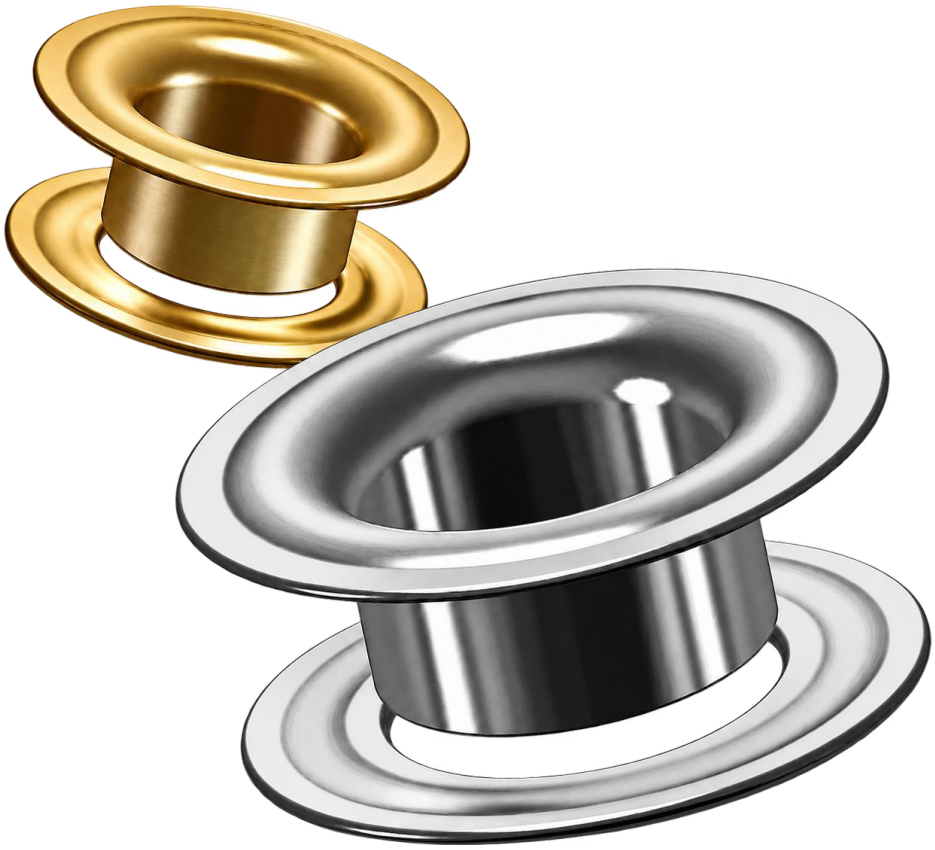

NOTE - Washer orientation

Place the washer on the lower tool with the convex side facing downwards.

NOTICE - Processing limits

Use brass or steel eyelets with an eyelet wall thickness of 0.3 mm and an internal diameter up to 15 mm. Do not use stainless steel eyelets. The 0.3 mm refers to the eyelet, not to the material being worked.

6 Spare parts

Exploded drawing and spare parts list based on the manufacturer’s original documentation. The position numbers match the original.

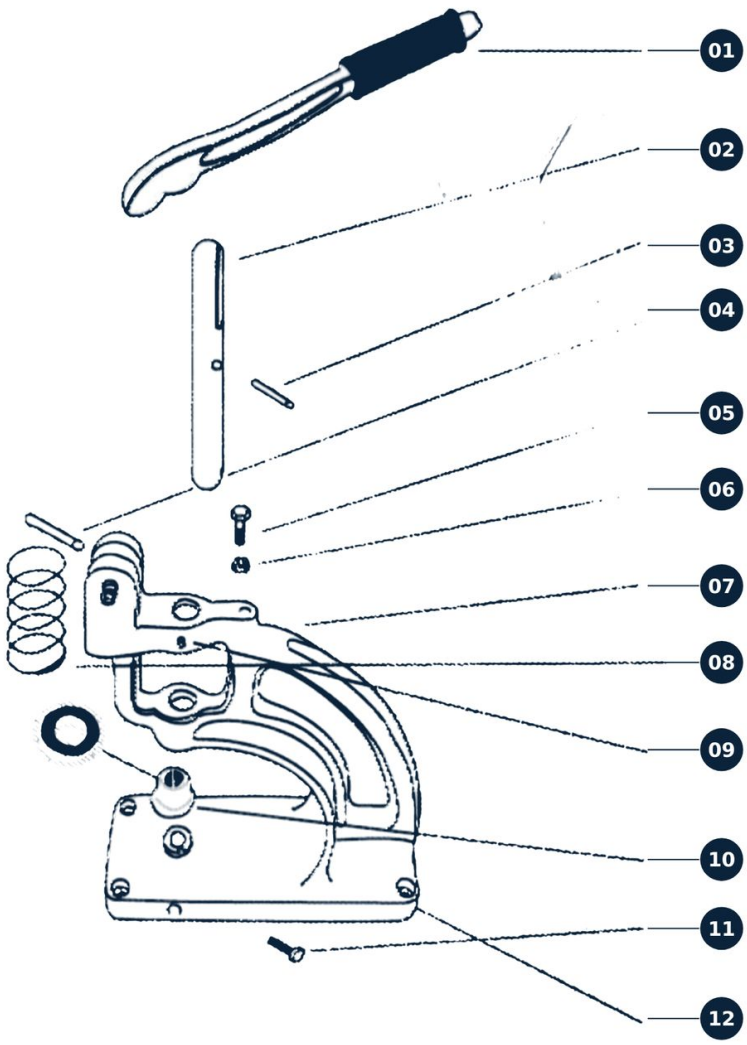

Pos.	Description
01	Lever
02	Shaft (ram)
03	Pin A
04	Pin B
05	Stroke adjustment screw
06	Nut
07	Frame
08	Spring
09	Pin
10	Tool holder (bushing)
11	Screw
12	Washer

Upper and lower tools are not part of the spare parts list; see Technical data for suitable tools.

For spare parts, please contact oesen-de.de and quote the position number.

7-10 Care, service and information

7 Care and storage

Keep tools, tool holder and ram clean and dry. Remove material and punching waste only when the lever is at rest. Clean the press with a soft, dry cloth. Occasionally apply a little oil to moving mechanical parts. Regularly check the stroke adjustment screw and nut (05/06) and the mounting screws for tightness. Store the press in a dry place out of reach of unauthorised persons.

8 Disposal

Take the metal press to a recycling centre or municipal metal collection point; observe local acceptance conditions. Separate the packaging by material and dispose of it through paper or packaging collection.

9 Manufacturer, importer and responsible person (GPSR)

Mario Goetz · oesen-de.de | We have the solution!
Manufacturer and importer - also the responsible person in the EU
Manufactured in China on behalf of oesen-de.de
Habichtstrasse 22 · 81827 München · Germany
E-mail: info@oesen-de.de · Web: www.oesen-de.de · Tel. +49 8121 999 9 771
Item no. 10038 · Manufacturer number HP-3M
Country of origin: China

10 Warranty and liability information

Warranty information: www.oesen-de.de/agb. All information is provided without guarantee. Subject to technical changes, errors and misprints. Illustrations may differ from the items supplied. To the extent permitted by law, oesen-de.de accepts no liability for damage caused by improper use, unauthorised modifications or failure to follow these instructions. Mandatory statutory liability remains unaffected.

DISTRIBUTOR · oesen-de.de | We have the solution!

Habichtstrasse 22, 81827 München
Tel. +49 8121 999 9 771 · Fax +49 89 999 50 921
info@oesen-de.de · www.oesen-de.de

Translated, edited and designed by oesen-de.de based on the manufacturer’s original documentation. Version: October 2026.