Euro-slot punch 32 × 6,5 × 9 mm

Product information and safety information

Hand-operated lever punch for Euro hanging slots in paper, cardboard and plastic. Item number **10049** · Manufacturer’s reference **8107**.



1 Product overview

1 Lever

2 Punch head with “▽” mark

3 Light grey housing

4 Knurled screw: edge-distance stop

5 Paper guide with guide ruler

6 Base; waste tray on the underside

Legend - information and symbols

CAUTION	Possible risk of injury.
NOTICE	Possible damage to property.
NOTE / TIP	Helpful information on use.

Read this information before use. Keep it and pass it on with the punch if you give it to someone else.

2 Technical data

Feature	Specification
Designation	Euro-slot punch 32 × 6,5 × 9 mm
Item no. / Manufacturer’s reference	10049 / 8107
EAN/GTIN / Amazon-ASIN	4260606879479 / B097HPTZ9Z
Design / Material	Hand-operated lever punch / Metal
Hole shape	Euro slot (hanging slot)
Hole dimensions	Width 32 mm; height 6,5 mm; central arch 9 mm
Suitable materials	Paper, cardboard, plastic
Punching capacity: paper / cardboard	Up to 1,5 mm
Punching capacity: plastic	Up to 1,0 mm
Edge distance	Adjustable: 4,0–9,5 mm
Paper guide	Adjustable, with guide ruler (scale)
Punching waste	Waste tray on the underside
Dimensions (L × W × H)	16 × 6 × 12,5 cm
Weight / Country of origin	0,52 kg / China
Manufacturer / Importer	oesen-de.de
Scope of delivery	1 Euro-slot punch

Euro-slot dimension drawing

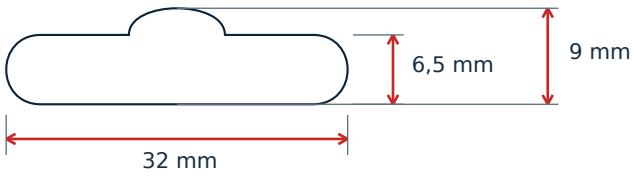

Application

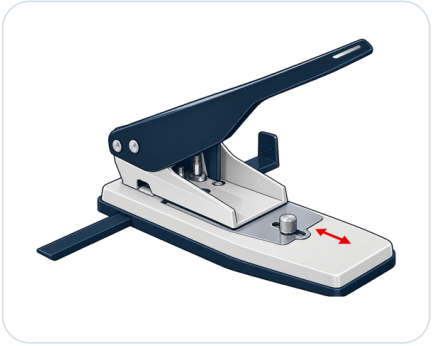

A Set the edge distance

Edge distance 4,0–9,5 mm

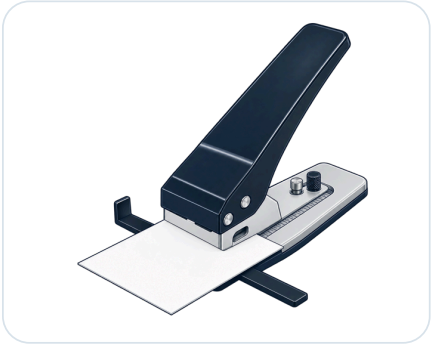

B Insert the material

Up to: paper/cardboard 1,5 mm · plastic 1,0 mm



C Result

Euro slot 32 × 6,5 × 9 mm

3 Safety information

CAUTION - Crushing and cutting hazard

Keep fingers away from the punching area and the gap between the lever and housing. Do not reach into the opening in the punch head. Do not operate the device during adjustment, cleaning or emptying.

CAUTION - Safe workplace

Place the punch on a stable, level surface. Keep the working area clear. Keep the device out of children’s hands; it is not a toy. Do not allow unauthorised persons to use it.

NOTICE - Materials and punching capacity

Use the punch only for paper, cardboard and plastic. Do not exceed the maximum material thickness: **paper/cardboard 1,5 mm; plastic 1,0 mm.** Do not punch metal parts, staples or similar foreign objects. Remove these before inserting the material.

NOTICE - Damaged devices

Do not use the device if it is damaged. Do not make any unauthorised modifications. If it jams, do not continue punching with extra force; stop work and contact oesen-de.de.

CAUTION - Removing punching waste

Empty the waste tray on the underside regularly. Do not operate the lever while doing so. Keep fingers away from the punching area when removing waste as well.

Storage: Store the punch in a dry place inaccessible to unauthorised persons.
Passing on the device: Keep this safety information and pass it on with the device.

4 Operation - preparation

Applications: packaging, bags, labels and header cards made from the specified materials, for hanging on Euro hooks or suitably equipped pegboards in retail.

01

Position the device

Place the punch on a stable, level surface. Before use, check the device for visible damage.

02

Set the edge distance

Loosen the knurled screw on the stop at the punch head. Set the edge distance to 4,0–9,5 mm and retighten the knurled screw.

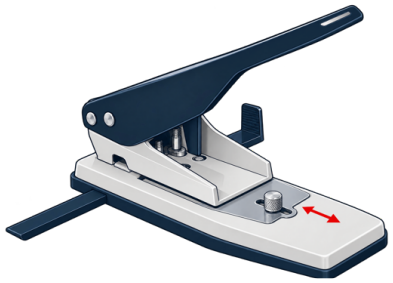

A · Edge distance 4,0–9,5 mm

03

Set the paper guide

Set the paper guide to the required lateral position on the guide ruler. This sets a centred or consistent hole position.

i

TIP - Make a test punch first

First check the set hole position on a scrap piece of the intended material.

4 Operation - punching

04

Insert the material

Insert the material against both stops. Observe the maximum thickness: 1,5 mm for paper/cardboard and 1,0 mm for plastic. Keep fingers away from the punching area.

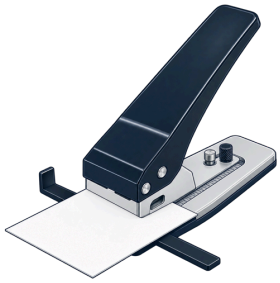

B · Up to: paper/cardboard 1,5 mm · plastic 1,0 mm

05

Punch the Euro slot

Press the lever evenly all the way down. Then return it to its starting position and remove the material.

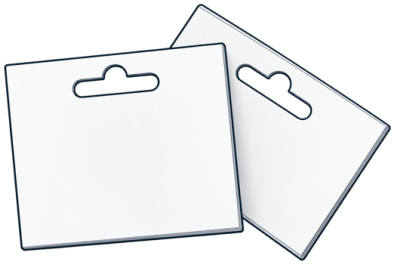

C · Euro slot 32 × 6,5 × 9 mm

06

Empty the waste tray

Empty the waste tray on the underside regularly. Do not operate the device while doing so. Make sure the tray is correctly seated before using the device again.

CAUTION - Keep fingers clear

Do not reach into the punching area or between the lever and housing. Do not operate the device when emptying the waste tray.

5-8 Care, service and information

5 Care and storage

Remove loose punching waste while the device is not being operated. Clean accessible external surfaces with a dry, soft cloth. Do not reach into the punching area. Store the device in a dry place inaccessible to unauthorised persons.

6 Disposal

Take the metal device to a recycling centre or municipal metal collection point; observe local acceptance conditions. Separate the packaging by material and dispose of it through paper or packaging collection.

7 Manufacturer, importer and responsible person (GPSR)

Mario Goetz · oesen-de.de
Manufacturer and importer - also the responsible person in the EU
Manufactured in China on behalf of oesen-de.de
Habichtstrasse 22 · 81827 München · Germany
E-Mail: info@oesen-de.de · Web: www.oesen-de.de · Tel. +49 8121 999 9 771

Item no. 10049 · Manufacturer’s reference 8107 · EAN 4260606879479
Country of origin: China

8 Statutory warranty and liability notice

Information on statutory warranty: www.oesen-de.de/agb.

All information is provided without guarantee. Subject to technical changes, errors and misprints. Images may differ from the items supplied. To the extent permitted by law, oesen-de.de accepts no liability for damage caused by improper use, unauthorised modifications or failure to follow these instructions. Mandatory statutory liability remains unaffected.

DISTRIBUTOR · oesen-de.de | We have the solution!

Habichtstrasse 22, 81827 München
Tel. +49 8121 999 9 771 · Fax +49 89 999 50 921
info@oesen-de.de · www.oesen-de.de

Created and designed by oesen-de.de. Version: October 2026.