Operating instructions

HANG 102-00 Basis Piccolo eyelet press

Manufacturer: **Hang GmbH**. This manual eyelet press is used to set eyelets. These instructions guide you through operation, adjustment and care.



Fig. A · Machine view with stops [1] and hand lever [2]

Machine overview

1	Stops · Fig. A	8	Eyelet hopper · Fig. D
2	Hand lever · Fig. A	9	Eyelet hopper lid · Fig. D
4	Knurled screws · Fig. B	10	Knurled lid screw · Fig. D
5	Side stop · Fig. B	11	Lower die · Fig. E
6	Rear stop screw · Fig. C	18	Upper die · Fig. G
7	Rear stop · Fig. C	26	Lubrication points · Fig. M

Further item numbers are explained in the relevant work steps.

IMPORTANT – Read before first use

- Read these instructions in full and follow the guidance.
- **CAUTION:** Keep fingers out of the area beneath the die.
- **NOTICE:** Do not operate the hand lever without material inserted. Repeated eyelet setting can damage the dies.
- **NOTICE:** Load only the eyelet size for which the machine is set up. Incorrect eyelets can cause malfunctions and damage.
- **CAUTION:** The spiral spring is preloaded. Bear this in mind when working on the eyelet hopper.
- Empty the eyelet hopper before working on the feed mechanism.

Operation

Notices and symbols

CAUTION	Possible risk of injury.
NOTICE	Possible damage to the machine or other property.
NOTE / TIP	Helpful information on use.

Use: Use this machine to set eyelets. Other applications are not intended uses. The user is responsible for damage or injury caused by improper use.
Items supplied: Eyelet press and tool.

01



Setting up the machine

Place the machine on a stable surface, such as a worktop or desk.

Keep the sturdy shipping packaging for returning the machine for an overhaul at a later date.

02

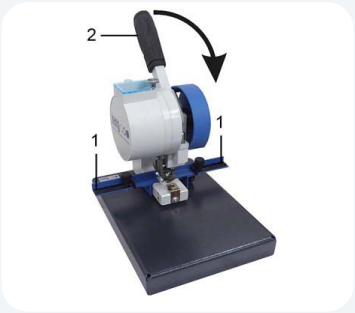

Fig. A

Inserting material and setting eyelets

Place the material against the stops [1] and over the lower die.

Pull the hand lever [2] briskly forwards. This sets the eyelet.

Release the hand lever [2]. The spring returns it to its starting position.

NOTICE – Protect the dies

Operate the hand lever only with material inserted. Repeated eyelet setting without material can damage the dies.

Notes on the result

First set a test eyelet in a scrap piece.
The force required depends on the eyelet size. The leverage makes setting easier. Check the result before starting the job.

Stops and eyelet setting

01



Fig. B

Adjusting the side stop

Loosen the knurled screws [4].

Move the side stop [5] to the required distance.

Retighten the knurled screws [4].

02



Fig. C

Adjusting the rear stop

Loosen the screw [6].

Move the rear stop [7] to the required distance.

Retighten the screw [6].

03

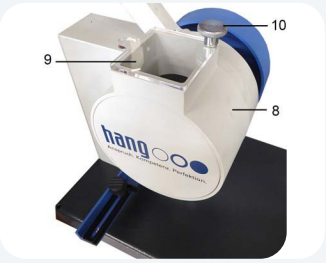

Fig. D

Refilling eyelets

Loosen the knurled screw [10].

Turn the lid [9] to one side.

Fill the eyelet hopper [8] to about **2/3 full.**

NOTICE – Use the correct eyelets

The machine is set up for a single eyelet size. Incorrect eyelets can cause malfunctions or damage to the machine.

04

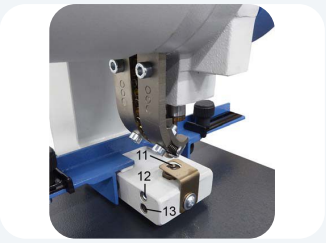

Fig. E

Adjusting the setting pressure

If the eyelets are set too loosely or too tightly, adjust the pressure via the lower die [11].

Loosen the grub screw [12].

Adjust the lower die [11] using the grub screw [13].

Clamp the lower die [11] in place again using the grub screw [12].

NOTE – Direction of rotation of grub screw [13]

More pressure: turn clockwise.
Less pressure: turn anticlockwise.

Replacing the dies

NOTE – Access to the dies

Push the eyelet feed channel to one side for better access when replacing the dies.

01

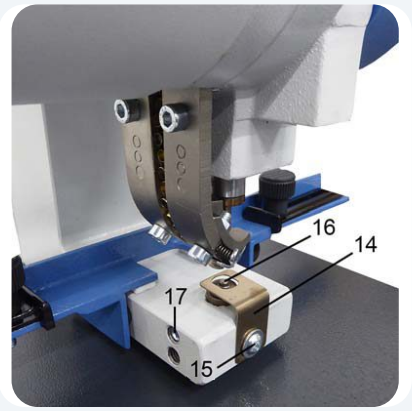

Fig. F

Replacing the lower die

Loosen the clamping screw [15] of the stripper spring [14] and swing the stripper spring to one side.

Loosen the clamping screw [17] of the lower die [16].

Pull the lower die [16] upwards and out.

Fit the new lower die in reverse order.

02

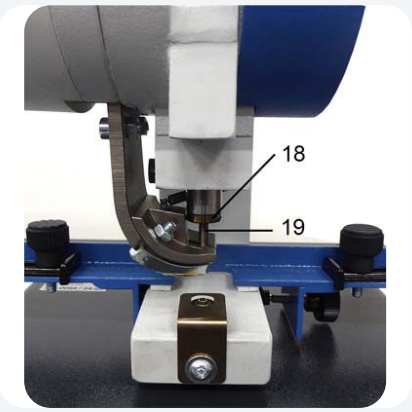

Fig. G

Replacing the upper die

Unscrew the upper die [18] using the supplied **SW12** open-ended spanner.

If the locating pin [19] is also being replaced, pull it downwards and out with pliers.

Insert the new locating pin through the new upper die.

Screw both together into the ram.

TIP – Completing the replacement

Set a test eyelet. Readjust the setting pressure if necessary (see page 3).

Replacing the brush disc

CAUTION – Preloaded spiral spring

The spiral spring is under tension. Proceed carefully during disassembly.

NOTE – Empty the eyelet hopper

Empty the eyelet hopper before disassembly to prevent eyelets from falling out.

01 Removing the cover and fasteners

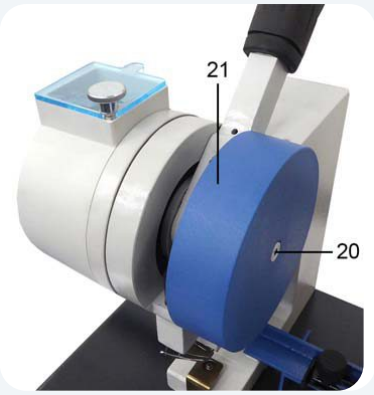

Fig. H



Fig. I

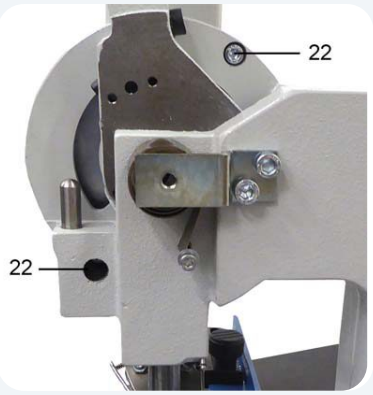

Fig. J

Loosen and remove the screw [20].

Remove the cover [21] (Fig. H).

Loosen and remove the screws [22] (Fig. I and J).

02 Removing the hopper and replacing the brush disc



Fig. K

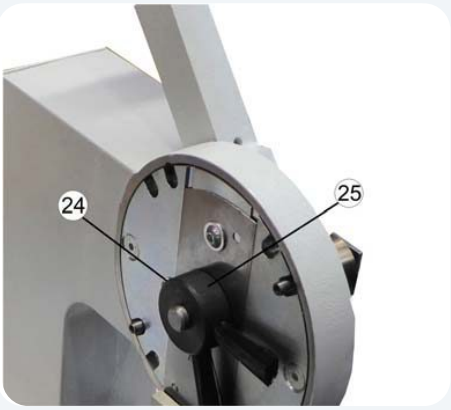

Fig. L

Pull the eyelet hopper [23] off to the left (Fig. K).

Loosen the screw [24].

Pull off the brush disc [25] (Fig. L).

Fit the new brush disc and reassemble the parts in reverse order.

Care and troubleshooting

01 Clearing eyelet feed faults

Incorrect or defective eyelets, dirt and other foreign matter in the hopper or feed mechanism can disrupt operation. Worn bristles can also be the cause.

First empty the eyelet hopper.
Remove the tension spring that pulls the eyelet feed channel towards the machine body.
Remove the eyelet hopper as described on page 5 (Fig. H to K).
Eliminate the cause of the fault.
Refit the eyelet hopper.

CAUTION – Observe the disassembly warning

The spiral spring is preloaded. Follow the guidance on page 5 when working on the eyelet hopper.

02 Cleaning the machine

Clean the machine regularly.
Remove all dirt deposits, especially from the guide grooves of the eyelet feed mechanism.

03

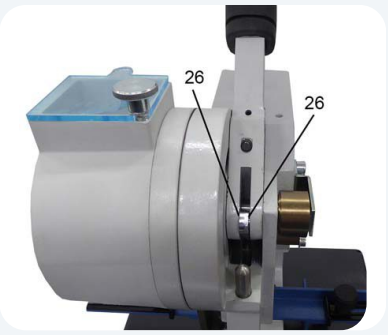

Fig. M

Oiling the lubrication points

If the machine is used daily, oil it **1× weekly.**
Using an oil can, carefully apply **1 drop of oil** to each lubrication point [26].
Wipe off excess oil with a cloth.
Suitable machine oils are listed on page 7.

04 Checking wear quarterly

Check the condition of the dies and brush disc **quarterly.** Order replacements for worn parts using the spare parts list. Routine maintenance comprises cleaning and lubrication.

Service and contact

Lubricant recommendation

Use one of the listed oils or an equivalent machine oil.

Brand	Machine oil
ARAL	Dural MR 68
BP	Energol EM 68
ESSO	Coray 68
SHELL	Carnea 68
MOBIL	Heavy Medium
DEA	Viscoma 68

TIP – Reordering eyelets and spare parts

When ordering, state the machine type and the eyelet size it is set up for. Eyelets and spare parts are available from oesen-de.de. Please also report any unclear points or errors in these instructions.

Statutory warranty: See the terms and conditions of oesen-de.de at www.oesen-de.de/agb.

Manufacturer and distributor

MANUFACTURER

Hang GmbH

Adolf-Safft-Str. 10
73037 Göppingen
Germany

DISTRIBUTOR

oesen-de.de | We have the solution!
Habichtstrasse 22
81827 München
Germany
Tel.: +49 8121 999 9 771
Fax: +49 89 999 50 921
Email: info@oesen-de.de
www.oesen-de.de

Liability notice

All information is provided without guarantee. Subject to technical changes, errors and misprints. Images may differ from the items supplied. The manufacturer’s specifications are authoritative. To the extent permitted by law, oesen-de.de accepts no liability for damage due to improper use, unauthorised modifications or failure to follow these instructions. Mandatory statutory liability remains unaffected.

Technical content and illustrations based on the manufacturer’s documentation, edited and designed by oesen-de.de. Version: October 2026.